Vor Auslegung einer automatisierten Verarbeitung des Teils sollte Ruecksprache mit Fa. A.Raymond gehalten werden.
Fully automatic processing of the part requires prior consultation with A.Raymond GmbH.

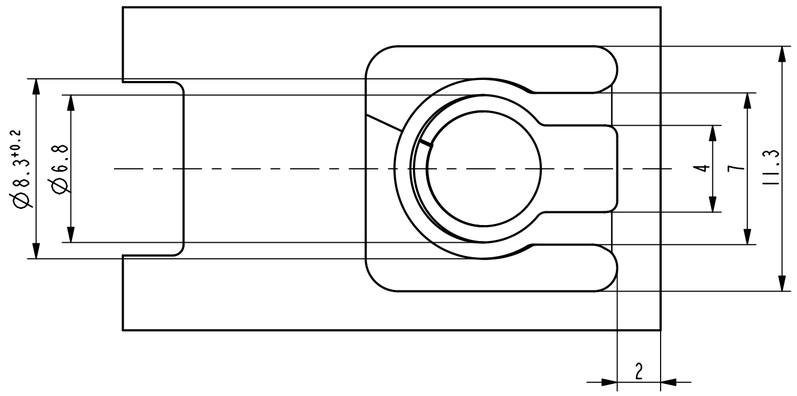

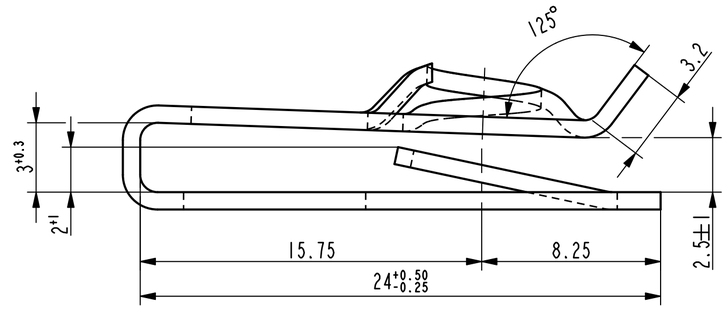

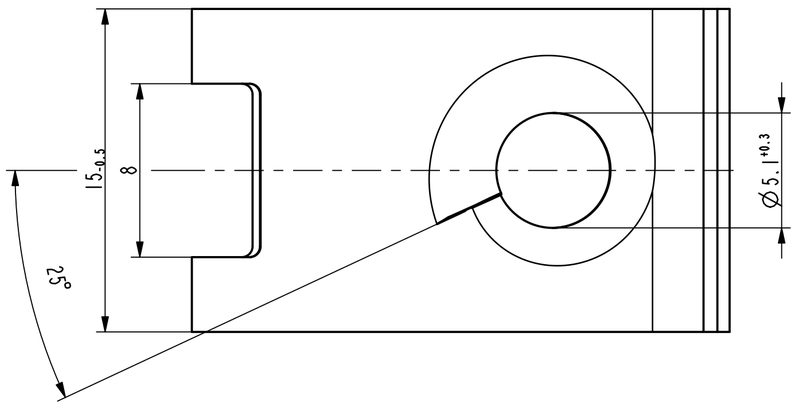

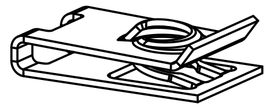

3D-Ansicht /
isometrical view
2:1

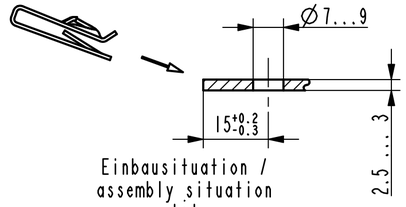

Einbausituation /
assembly situation
1:1

Rev.	Anzahl/ quantity	Aenderungsbeschreibung / modification description	Datum/date	Name
-	-	-	-	-
-	-	-	-	-
-	-	-	-	-
-	-	-	-	-
-	-	-	-	-
-	-	-	-	-
-	-	-	-	-
-	-	-	-	-
-	-	-	-	-
Ac	-	Oberflaechenvariante entfernt (3000)	13.05.11	mj

ARaymond
A RAYMOND GmbH & Co.KG
Teichstrasse 57
Germany - 79511 Loerrach
Phone +49 (0) 7621 174-0
Fax +49 (0) 7621 174-225

Bei Verstaendnisproblemen beantragen Sie bitte beim Absender die deutsche Fassung vor jeder Anwendung.
"CONDITIONS OF USE"
This drawing and all information (the "Drawing") disclosed are the exclusive property of A.Raymond.
By using this Drawing the Addressee acknowledge and accept that this Drawing
(1) is covered by A.Raymond' intellectual property rights or know-how and
(2) is provided under the following conditions who represent a Deposit Agreement.
This Drawing is for Addressee' internal use only limited to its estimation.
Without prior written consent of A.Raymond, no permission or rights for any purpose, is hereby granted, such as, without any limitation,
(1) the copy, in part or entirely
(2) and/or the presentation, in part or entirely, to any other third party outside the Addressee' company or in the company but with no interest
(3) and/or the distribution of the Drawing, in part or entirely, in any medium
(4) and/or the creation of any derivative work.
In case of breach of these conditions, Addressee shall indemnify A.Raymond from and against all damages (compensatory or consequential), costs, expenses and charges, caused or arising out of or attributable to its willful misconduct, fraud, negligence, infringement of A.Raymond' intellectual property rights. If the Addressee does not accept these conditions, please notify A.Raymond' sender immediately.

Intellectual property rights	vorbehalten / all rights reserved		Classification code: AABAG
Ersatz fuer/ substitute for	012499_c_01/Ab/27.08.2008	Entw.Ref./ dev.ref.	Projekt-Nr./ project no.
Maszstab/ scale: 5:1	Format: A2	Allgemeintoleranz/ general tolerance: ±0.25 / ±5°	Datum/ date: 13.05.2011
			Erstellt von/ prepared by: M. Junge
Projektion / projection	ALL DIMENSIONS ARE IN MILLIMETERS	Freigegeben/ approved: 20110516084334	
	Blechdicke/ mat. thickness DIN EN 10140: 0.80	Volumen/ volume (mm³): 478.4	Gewicht/ weight (g): 3.8

Oberfl./ finish: metallhaltige Korrosionsschutzbeschichtung, Farbe silber, GZ
metallic corrosion protection coated, colour silver, lubricated
Oberfl. Code/ finish code: 5452

Werkstoffbehandl./ material treatment: zwischenstufenverguetet / austempered
375 ... 475 HV 5

Werkstoff/ material: C67S DIN EN 10132-4
Mat. code: 1000

Benennung/ title:

Blechmutter

fuer Gewinde EN ISO 1478-ST6.3

sheet metal nut

for thread EN ISO 1478-ST6.3

Teil-Nr./ part no.: 012499-0-02
Drawing type: C:Customer

Kundenteile-Nr. / customer part no. -
Blatt / sheet 1 / 1

CAD system & version ProE WF4
Dateiname / filename 012499-0C00

http://www.cergy-vis.fr
[CERGY-VIS]
ET SI ON PARLAIT SERVICE

Teil-Nr. / part no.	Oberflaeche / Farbe / finish / colour	Oberfl. Code/ finish code
012499-0-04	metallhaltige Korrosionsschutzbeschichtung, Farbe schwarz metallic corrosion protection coated, colour black	5451
012499-0-03	verzinkt / passiviert farblos zinc plated / passivated colourless	3250

Ausfuehrung / Execution