http://www.cergy-vis.fr
[CERGY-VIS]
ET SI ON PARLAIT SERVICE

Vor Auslegung einer automatisierten Verarbeitung des Teils sollte Rueckspracheh mit Fa. A.Raymond gehalten werden.
Fully automatic processing of the part requires prior consultation with A.Raymond GmbH.

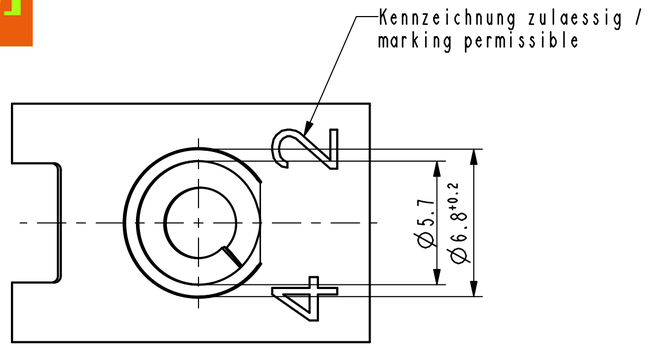

3D-Ansicht /
isometrical view
2:1

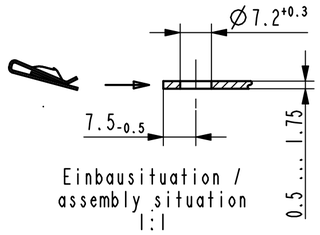

Einbausituation /
assembly situation
1:1

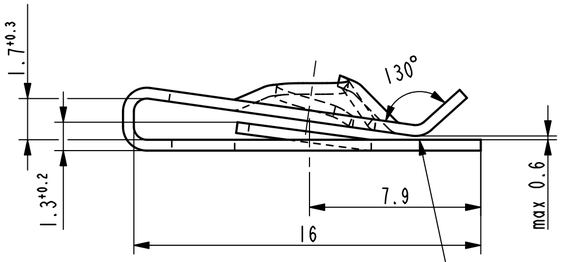

Ueberbrueckung der Oeffnung durch metallhaltige
Korrosionsschutzbeschichtung zulaessig /
surface finish bridging permissible

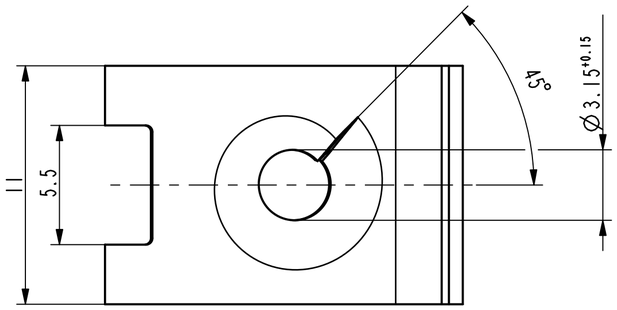

Rev.	Anzahl/ quantity	Aenderungsbeschreibung / modification description	Datum/date	Name
-	-	-	-	-
-	-	-	-	-
-	-	-	-	-
-	-	-	-	-
-	-	-	-	-
-	-	-	-	-
-	-	-	-	-
-	-	-	-	-
-	-	-	-	-
Db	-	Oberflaechenvariante entfernt (3000, 3620)	02.12.10	mj

A.Raymond GmbH & Co. KG
Teichstrasse 57
Germany - 79511 Loerrach
Phone +49 (0) 7621 174-0
Fax +49 (0) 7621 174-225

Bei Verstaendnisproblemen beantragen Sie bitte beim Absender die deutsche Fassung vor jeder Anwendung.
"CONDITIONS OF USE"
This drawing and all information (the "Drawing") disclosed are the exclusive property of A.Raymond.
By using this Drawing the Addressee acknowledge and accept that this Drawing
(1) is covered by A.Raymond' intellectual property rights or know-how and
(2) is provided under the following conditions who represent a Deposit Agreement.
This Drawing is for Adressee' internal use only limited to its estimation.
Without prior written consent of A.Raymond, no permission or rights for any purpose, is hereby granted, such as, without any limitation,
(1) the copy, in part or entirely
(2) and/or the presentation, in part or entirely, to any other third party outside the Addressee' company or in the company but with no interest
(3) and/or the distribution of the Drawing, in part or entirely, in any medium
(4) and/or the creation of any derivative work.
In case of breach of these conditions, Addressee shall indemnify A.Raymond from and against all damages (compensatory or consequential), costs, expenses and charges, caused or arising out of or attributable to its willful misconduct, fraud, negligence, infringement of A.Raymond' intellectual property rights. If the Addressee does not accept these conditions, please notify A.Raymond' sender immediately.

Schutzrechte/ patent rights	vorbehalten / all rights reserved		Rasch Code/ classification: AABAD
Ersatz fuer/ substitue for	011362_c_01/Da/11.08.2006	Entw.Ref./ dev.ref.	Projekt-Nr./ project no.
Maszstab/ scale: 5:1	Format: A2	Allgemeintoleranz/ general tolerance: ±0.3 / ±5°	Datum/ date: 02.12.2010
			Erstellt von/ prepared by: M. Junge
Projektion / projection	ALL DIMENSIONS ARE IN MILLIMETERS		Freigegeben/ approved: 20101202095419
	Blechdicke/ mat. thickness DIN EN 10140: 0.50	Volumen/ volume (mm3): 157.5	Gewicht/ weight (g): 1.3
Oberfl./ finish	phosphatiert / phosphated		Oberfl. Code/ finish code: 5000
Werkstoffbehandl./ material treatment	zwischenstufenverguetet / austempered 375 ... 475 HV 5		
Werkstoff/ material	C67S DIN EN 10132-4		Mat. code: 1000
Benennung/ title	Blechmutter fuer Gewinde EN ISO 1478 - ST4.2 / sheet metal nut for thread EN ISO 1478 - ST4.2		
Teil-Nr./ part no.	011362-0-03		Drawing type: Customer
Kundenteile-Nr. / customer part no.	-		Blatt / sheet: 1 / 1
CAD system & version	ProE WF3	Dateiname / filename	011362-0C00

Teil-Nr. / part no.	Oberflaeche / Farbe / finish / colour (Ausfuehrung / Execution)	Oberfl. Code/ finish code
011362-0-14	metallhaltige Korrosionsschutzbeschichtung, Farbe silber, GZ metallic corrosion protection coated, colour silver, lubricated	4001
011362-0-13	phosphatiert / impraegniert phosphated / oiled	5100
011362-0-12	metallhaltige Korrosionsschutzbeschichtung, Farbe silber metallic corrosion protection coated, colour silver	5410
011362-0-11	verzinkt / passiviert farblos zinc plated / passivated colourless	3250
011362-0-10	metallhaltige Korrosionsschutzbeschichtung, Farbe schwarz, GZ metallic corrosion protection coated, colour black, lubricated	5453
011362-0-09	Delta Tone / Dorritech B17	9999
011362-0-07	impraegniert oiled	7000
011362-0-06	metallhaltige Korrosionsschutzbeschichtung, Farbe silber, GZ metallic corrosion protection coated, colour silver, lubricated	5452
011362-0-05	metallhaltige Korrosionsschutzbeschichtung, Farbe schwarz metallic corrosion protection coated, colour black	5441
011362-0-04	verzinkt / metallhaltige Korrosionsschutzbeschichtung, Farbe silber zinc plated / metallic corrosion protection coated, colour silver	5500