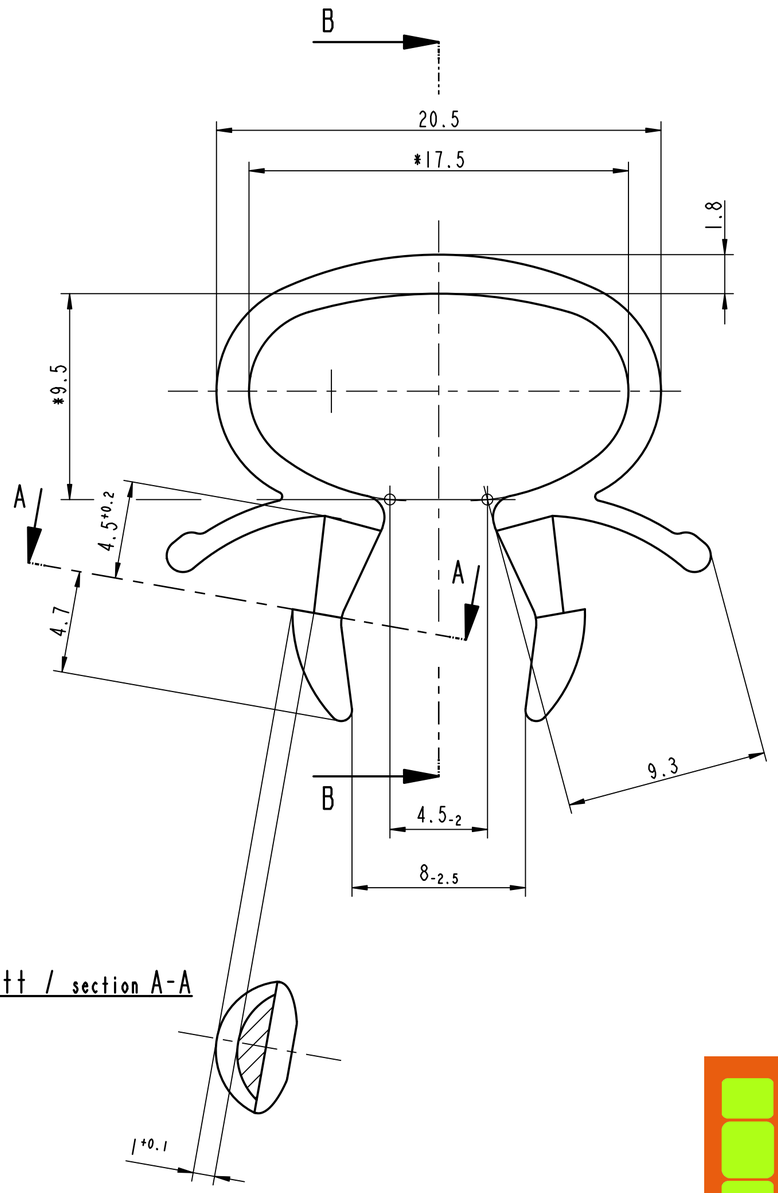

Schnitt / section A-A

Schnitt / section B-B

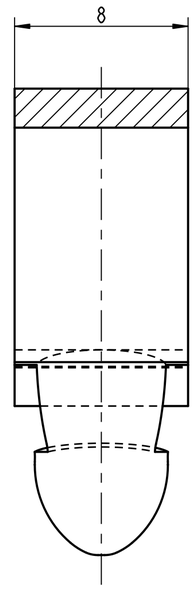

1:1

Befest. - Loch = Ø6,5 +0.2
Fastening hole
Befest. - Dicke = 1,5 ... 3
Fastening thickness

* Masse im montierten Zustand:/
* Measures in the assembled condition:
*9.5 = ca. 8.6
*17.5 = ca. 15.8

Angaben zum Werkstoff: / Information about material:
max. Dauertemperatur T=130°C bei 5000 h
bezogen auf 50% Zugfestigkeitsabfall
entspr. IEC 216-1
max. permanent temperature T=130°C at 5000 h
based regarding on 50% tensile strength reduction
corresponds to IEC 216-1

Rev.	Anzahl/ quantity	Aenderungsbeschreibung / modification description	Datum/date	Name
-	-	-	-	-
-	-	-	-	-
-	-	-	-	-
-	-	-	-	-
-	-	-	-	-
-	-	-	-	-
-	-	-	-	-
-	-	-	-	-
-	-	-	-	-
Aa	-	Zeichnung ueberarbeitet nach AR-Gruppenstandard,Teil unveraendert	02.05.12	kl

ARaymond
A RAYMOND GmbH & Co.KG
Teichstrasse 57
Germany - 79511 Loerrach
Phone +49 (0) 7621 174-0
Fax +49 (0) 7621 174-225

Bei Verstaendnisproblemen beantragen Sie bitte beim Absender die deutsche Fassung vor jeder Anwendung.
"CONDITIONS OF USE"
This drawing and all information (the "Drawing") disclosed are the exclusive property of ARaymond.
By using this Drawing the Addressee acknowledge and accept that this Drawing
(1) is covered by ARaymond' intellectual property rights or know-how and
(2) is provided under the following conditions who represent a Deposit Agreement.
This Drawing is for Adressee' internal use only limited to its estimation.
Without prior written consent of ARaymond, no permission or rights for any purpose, is hereby granted, such as, without any Limitation,
(1) the copy, in part or entirely
(2) and/or the presentation, in part or entirely, to any other third party outside the Addressee' company or in the company but with no interest
(3) and/or the distribution of the Drawing, in part or entirely, in any medium
(4) and/or the creation of any derivative work.
In case of breach of these conditions, Addressee shall indemnify ARaymond from and against all damages (compensatory or consequential), costs, expenses and charges, caused or arising out of or attributable to its willful misconduct, fraud, negligence, infringement of ARaymond' intellectual property rights. If the Addressee does not accept these conditions, please notify ARaymond' sender immediately.

Schutzrechte/ patent rights	vorbehalten / all rights reserved		Classification Code BADA-
Ersatz fuer/ substitue for	15008.654/1/22.10.2001	Entw.Ref./ dev.ref.	Projekt-Nr./ project no. 11634-K

Maszstab/ scale	Format	Allgemeintoleranz/ general tolerance		
5:1	A2	siehe Tabelle/see table	Datum/ date	02.05.2012
			Erstellt von/ prepared by	Klar
Projektion / projection		ALL DIMENSIONS ARE IN MILLIMETERS	Freigegeben/ approved	20120503084746
		Blechdicke/ mat. thickness DIN EN 10140 -	Volumen/ volume (mm3) 800.9	Gewicht/ weight (g) 0.9

Oberfl./ finish	- -
Oberfl. Code/ finish code	-
Werkstoffbehandl./ material treatment	konditioniert / conditioned Wassergehalt / water content 2 ... 4%
Werkstoff/ material	PA 66 - waermestabil PA 66 - heat stabilized
Mat. code	2003
Benennung/ title	Omegahalter cable clip
Teil-Nr./ part no.	015008-0-00
Drawing type	C:Customer
Kundenteile-Nr. / customer part no.	-
Blatt / sheet	1 / 1
CAD system & version	ProE WF4
Dateiname / filename	015008-0C00

015008-0-00	schwarz black SW	7000
Teil-Nr. / part no.	Oberflaeche / Farbe / finish / colour	Oberfl. Code/ finish code
	Ausfuehrung / Execution	

>400 <= 1000	±2
>120 <= 400	±1.5
> 30 <= 120	±1
> 6 <= 30	±0.5
<= 6	±0.25
Winkel / Angle	±3°

Allgemeintoleranzen fuer Nennmasze ohne Toleranz.
General tolerances for nominal dimensions without specified tolerance.

http://www.cergy-vis.fr
[CERGY-VIS]
ET SI ON PARLAIT SERVICE