http://www.cergy-vis.fr
[CERGY-VIS]
ET SI ON PARLAIT SERVICE

Vor Auslegung einer automatisierten Verarbeitung des Teils sollte Rueckspracche mit Fa. A.Raymond gehalten werden.
Fully automatic processing of the part requires prior consultation with A.Raymond GmbH.

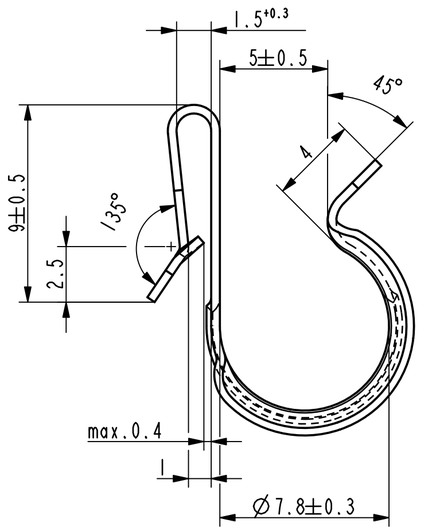

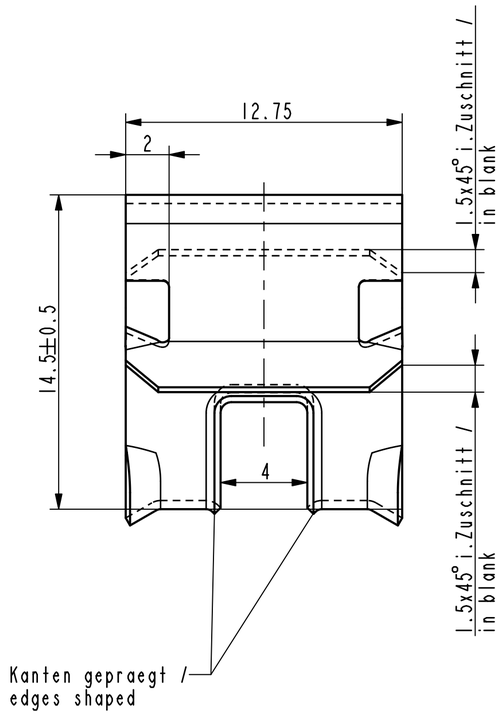

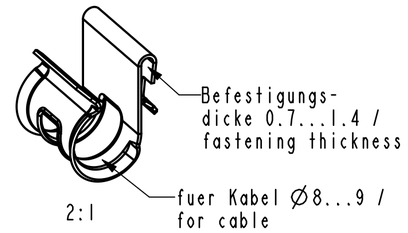

Rev.	Anzahl/ quantity	Aenderungsbeschreibung / modification description	Datum/date	Name
-	-	-	-	-
-	-	-	-	-
-	-	-	-	-
-	-	-	-	-
-	-	-	-	-
-	-	-	-	-
-	-	-	-	-
-	-	-	-	-
-	-	-	-	-
Af	1x	Oberflaechenvariante hinzug., Oberflaechenvariante 001 (3000) entf.	15.11.10	Ru

A.Raymond GmbH & Co. KG
Teichstrasse 57
Germany - 79511 Loerrach
Phone +49 (0) 7621 174-0
Fax +49 (0) 7621 174-225

Bei Verstaendnisproblemen beantragen Sie bitte beim Absender die deutsche Fassung vor jeder Anwendung.
"CONDITIONS OF USE"
This drawing and all information (the "Drawing") disclosed are the exclusive property of A.Raymond.
By using this Drawing the Addressee acknowledge and accept that this Drawing
(1) is covered by A.Raymond' intellectual property rights or know-how and
(2) is provided under the following conditions who represent a Deposit Agreement.
This Drawing is for Adressee' internal use only limited to its estimation.
Without prior written consent of A.Raymond, no permission or rights for any purpose, is hereby granted, such as, without any limitation,
(1) the copy, in part or entirely
(2) and/or the presentation, in part or entirely, to any other third party outside the Addressee' company or in the company but with no interest
(3) and/or the distribution of the Drawing, in part or entirely, in any medium
(4) and/or the creation of any derivative work.
In case of breach of these conditions, Addressee shall indemnify A.Raymond from and against all damages (compensatory or consequential), costs, expenses and charges, caused or arising out of or attributable to its willful misconduct, fraud, negligence, infringement of A.Raymond' intellectual property rights. If the Addressee does not accept these conditions, please notify A.Raymond' sender immediately.

Schutzrechte/ patent rights	vorbehalten / all rights reserved	Rasch Code/ classification	BACD-
Ersatz fuer/ substitute for	014277_C_01/Ae/09.04.2008	Entw.Ref./ dev.ref.	Projekt-Nr./ project no.
Maszstab/ scale: 5:1	Format: A2	Allgemeintoleranz/ general tolerance: ±0.25 / ±5°	Datum/ date: 15.11.2010
			Erstellt von/ prepared by: Ruzicka
Projektion / projection	ALL DIMENSIONS ARE IN MILLIMETERS	Freigegeben/ approved	20101115111707
	Blechdicke/ mat. thickness DIN EN 10140: 0.40	Volumen/ volume (mm3): 191.0	Gewicht/ weight (g): 1.5

Oberfl./ finish	metallhaltige Korrosionsschutzbeschichtung, Farbe anthrazit metallic corrosion protection coated, colour anthracite
Oberfl. Code/ finish code	5411
Werkstoffbehandl./ material treatment	zwischenstufenverguetet / austempered 435 ... 535 HV 5
Werkstoff/ material	C67S DIN EN 10132-4
Mat. code	1000
Benennung/ title	Leitungsbefestiger cable clip
Teil-Nr./ part no.	014277-0-02
Drawing type	Customer
Kundenteile-Nr. / customer part no.	-
Blatt / sheet	1 / 1
CAD system & version	ProE WF3
Dateiname / filename	014277-0C00

	Teil-Nr. / part no.	Oberflaeche / Farbe / finish / colour	Oberfl. Code/ finish code
Af	014277-0-08	metallhaltige Korrosionsschutzbeschichtung, Farbe schwarz metallic corrosion protection coated, colour black	5451
	014277-0-07	metallhaltige Korrosionsschutzbeschichtung, Farbe silber, GZ metallic corrosion protection coated, colour silver, lubricated	4000
	014277-0-06	metallhaltige Korrosionsschutzbeschichtung, Farbe silber, GZ metallic corrosion protection coated, colour silver, lubricated	4050
	014277-0-05	verzinkt / passiviert farblos zinc plated / passivated colourless	3250
	014277-0-04	metallhaltige Korrosionsschutzbeschichtung, Farbe silber, GZ metallic corrosion protection coated, colour silver, lubricated	4004
	014277-0-03	metallhaltige Korrosionsschutzbeschichtung, Farbe silber, GZ metallic corrosion protection coated, colour silver, lubricated	5442

Ausfuehrung / Execution