Variant	Finitions / Finishes
00	ZnNi(12-15%[Ni])8µ min +Cr3 noir/black + FOM ProtedurNi75+ CorrotriNoir/black+ Corrosil501 BS RR:720H
01	BRUT DE TREMPE
02	ZnFL Zn-Al + Si 8µ min Magni 2.1 gris/grey BS RR:600H

http://www.cergy-vis.fr
[CERGY-VIS]
ET SI ON PARLAIT SERVICE

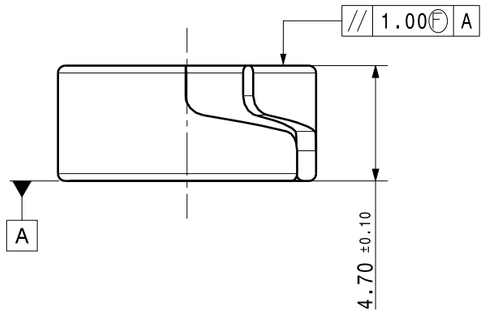

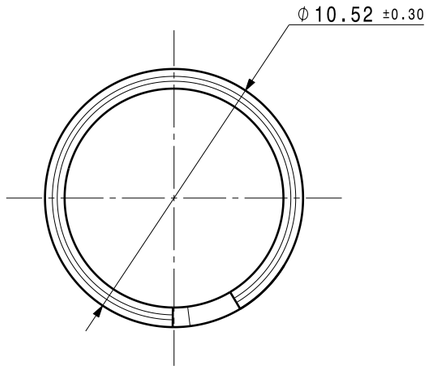

- Logement intérieur bague POUR INFORMATION : **Ø8,50mm +0/-0,30**
- Couple de serrage admissible C_1 et tenue sur support F_1 : à valider pour chaque nouvelle application
- Chanfrein d'entrée obligatoire
- Dans le cas d'une distribution automatique et/ou du surmoulage, le process doit être validé par ARaymond

- *Ring inner room FOR INFORMATION :* ***Ø8,50mm +0/-0,30***
- *Admissible tightening torque C_1 and pull out force F_1 : to be validated for each application*
- *Introduction chamfer required*
- *If automatic distribution and/or overmoulding, ARaymond must validate the process*

Exemple d'utilisation / *Use condition*

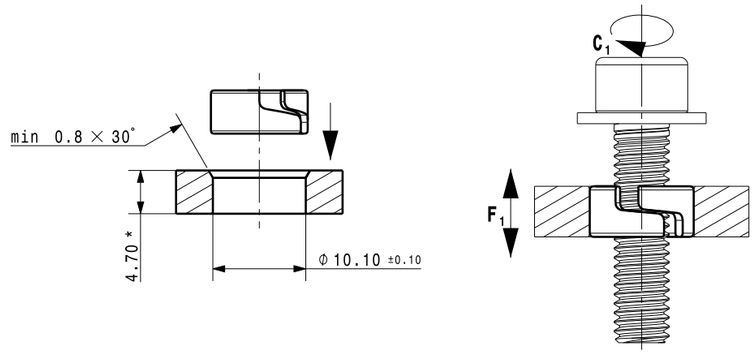

* Epaisseur modifiable / *Adjustable thickness*

A Raymond
113 cours Berriat BP 157
France - 38019 Grenoble cedex 1
Tel +33 (0) 4 76 33 49 49
Fax +33 (0) 4 76 78 20 50

Si probleme de comprehension, merci de demander la version francaise a ARaymond avant toute utilisation.
"CONDITIONS OF USE"
This drawing and all information (the "Drawing") disclosed are the exclusive property of A.Raymond.
By using this Drawing the Addressee acknowledge and accept that this Drawing
(1) is covered by A.Raymond intellectual property rights or know-how and
(2) is provided under the following conditions who represent a Deposit Agreement.
This Drawing is for Addressee internal use only limited to its estimation.
Without prior written consent of A.Raymond, no permission or rights for any purpose, is hereby granted, such as, without any limitation,
(1) the copy, in part or entirely
(2) and/or the presentation, in part or entirely, to any other third party outside the Addressee company or in the company but with no interest
(3) and/or the distribution of the Drawing, in part or entirely, in any medium
(4) and/or the creation of any derivative work.
In case of breach of these conditions, Addressee shall indemnify A.Raymond from and against all damages (compensatory or consequential), costs, expenses and charges, caused or arising out of or attributable to its willful misconduct, fraud, negligence, infringement of A.Raymond Intellectual Property rights. If the Addressee does not accept these conditions, please notify A.Raymond sender immediately.

Brevets / *Patent rights*			Classification code: XXXXX
N° Projet / *Project No.*	Origine / *Origin*	Chef de projet / *Project Manager*	DEGELIS
Echelle / *scale*: 4:1	Format: A3	Tolerance / *General tolerance*: Dimension ± 0.50, Angle ± 5.00°	Date: 13.05.2009
			Realise / *Prepared by*: DELAHOUSSE
		ALL DIMENSIONS ARE IN MILLIMETERS	Approuve / *Approved*: 20110411085115
		Epaisseur / *Mat. thickness*: 0,80	Volume (mm³): 102,6 — Poids / *Weight (g)*

Finition / *finish*: **Voir nomenclature / See parts list** — Code finition / finish code: -

Traitement structural / *Material treatment*: **C70D >0,5 : TTH.HR 30 N : 61,3 a 64,7 (42 a 46 HRc)**

Matiere / *Material*: **C70D** - — Mat. code: -

Libelle / Title

Bague antifluage RONDE
Anti-creep ring CIRCULAR

Reference / *Part no.*: **204803-0-00** — Drawing type: C:Customer

Ref. client / *Customer part no.* — Planche / *Sheet* 1/1

CAD system & version: CATIA V5 R19 SP7 — Nom fichier / *File name*: 204803-0C00

REV.	Quant.	Indice / revision description	Date	Name
Bf	-	MISE A JOUR CONDITION D'UTILISATION	11.04.11	QDE

VERIFIER L ECHELLE APRES PHOTOCOPIE / BEWARE SCALE AFTER COPY